Multi-Class Fault Type Classification Using Sequence Components and Wavelet Features with Comparative Study of Machine Learning Models and Neural Networks

Santosh Kumar Chaudhary
Department of Electrical and Electronics Engineering
Nepal Engineering College
santoshkchaudhary@ieee.org

Subash Khanal
Department of Electrical and Electronics Engineering
Nepal Engineering College
subashkhanal@ieee.org

Prabhat Kumar Chaudhary
Department of Electronics and Communication Engineering
Nepal Engineering College
theprabhatkch@gmail.com

Basanta Pancha
Department of Electrical and Electronics Engineering
Nepal Engineering College
basantap@nec.edu.np

Jitesh Kumar Yadav
Department of Electrical and Electronics Engineering
Kathmandu University
jiteshky9860@gmail.com

***Abstract*—The growing complexity of modern power networks requires intelligent fault classification techniques capable of handling multiple fault conditions with high accuracy. Classifying faults in transmission lines with higher accuracy is very important to provide reliability to the power system along with a shorter fault clearance time. The presented work provides a reliable fault classification system in transmission lines using a hybrid approach in feature extraction, taking into consideration both the symmetrical components and time-frequency analysis using wavelet transform. The hybrid technique will be able to analyze imbalance in both transients. Some machine learning algorithms along with an artificial neural network are presented for their implementation in a unified platform. A comparative study will be performed based on standard parameters for fault classification accuracy. The simulation results show improved accuracy with lower misclassifications among related faults using ensemble machine learning algorithms.**

***Index Terms*—Artificial neural networks, machine learning, multi-class fault classification, sequence components, transmission line faults, wavelet transform.**

I. Introduction

Effective and fast fault identification in power transmission lines is a basic necessity for ensuring the security of power systems and reducing the duration of power outages. With an increase in complexity in future power systems due to higher loading, long distance transmission, and interconnections with renewable energy resources, fault behavior has become dynamic in nature and more complicated for analysis with existing protection systems [1]. Conventional schemes utilizing relays have been proven reliable but sometimes show difficulties in identifying different faults simultaneously .

Recently, smart data-driven methods have gained high importance as efficient alternatives in the examination of faults in transmission lines [2]. Methods dependent on machine learning (ML) and artificial neural networks (ANN) have proven to be very effective in learning non-linear relationships among measured voltage and current signals [3]. Although these methods have shown good prospects in improving accuracy and speeding up decisions, their efficiency is largely reliant on the choice of distinctive features and the model used for learning in multi class classification tasks.

Line transients in power systems caused by faults are non-stationary in nature and possess important information in both time domains and frequency domains. Wavelet transform based feature extraction methods have gained popularity because they have a high time frequency resolution in capturing transients [4]. At the same time, sequence components such as positive, negative, and zero sequence have been effective in fault analysis in power systems because they can distinguish fault characteristics in both ground and non-ground faults. However, most research works available in literature have focused on wavelet transform features or sequence components independently, failing to take full advantage of both the methods .

In addition, most of the literature available so far considers a single classifier or lacks sufficient comparative analysis among learning methods, making it challenging to make an assessment among them. With the emergence of large datasets, there is a need to conduct a comparative analysis among classical machine learning models and neural network models using a common feature extraction technique [5].

In this article, a classifier system for a multi-class fault in transmission lines using a hybrid of sequence components and wavelet features will be proposed [6]. The total number of samples in this work used for reliable training and testing

will be 36,000. The readings of four different machine and deep learning algorithms, such as Decision Trees, Random Forest, XGBoost, and Artificial Neural Networks, will be evaluated. The performance analysis of the above-mentioned hybrid classifier will be performed in this article using various performance parameters [7].

The paper is organized as follows: section II discusses related work. The methodology and detailed system description used for the analysis is discussed in section III. The results and discussion are presented in section IV, and the paper is concluded in section V.

II. RELATED WORK

Intelligent fault detection and classification in power transmission lines has been an active research area for several decades. Early studies primarily employed artificial neural networks trained on time-domain voltage and current signals to identify fault conditions. The author [4], applied ANN-based methods for fault detection, classification, and location identification. The author [8], proposed an online ANN-based fault detection scheme, highlighting the potential of neural networks for real-time protection applications. With the advancement of signal processing techniques, wavelet transform-based feature extraction gained significant attention due to its effectiveness in analyzing non-stationary fault signals. In this paper [9], the author applied deep learning techniques for fault classification and location, demonstrating strong performance,but requiring large datasets and extensive training. The author of the paper [10] proposed an ANN-based fault detection method and reported reliable classification results under different fault scenarios. The author in the paper [11], further validated the applicability of ANN-based fault detection in a practical high-voltage transmission system With the emergence of deep learning, recent studies have adopted deep neural networks for fault classification in smart grids.

Although existing studies have reported promising results, several limitations remain. Many works focus on a single classifier or a finite set of fault types, while others rely on wavelet-based features or sequence components independently. Furthermore, comprehensive comparative analyzes between classical machine learning models and neural networks using a unified and physically meaningful feature set are relatively limited. These gaps motivate the present work, which combines sequence components and wavelet-based features and provides a detailed comparative evaluation of multiple machine learning models and an artificial neural networks for multi-class transmission line fault classification.

III. METHODOLOGY

The proposed methodology for fault in a three-phase power system is described in fig. 1. To begin with, a power system model is developed in MATLAB/Simulink, including generators, transmission lines, and loads, equally representing a practical working environment. A variety of faults such as line-to-ground (LG) faults, line-to-line (LL) faults, line-to-line-to-ground (LLG) faults, three-phase (LLL) faults, three-phase to-ground (LLLG) faults, and no faults are considered. The obtained measurements undergo a preprocessing step in which normalization and feature extraction takes place. A split in both datasets, training and testing with an 80/20 split, is performed. Then machine learning algorithms such as Decision Trees, Random Forest, XGBoost, ANN (Artificial Neural Network) are used based on the processed datasets, and accuracy and precision parameters are used for estimating model performance. Based on performance, a model can be chosen, in case of poor performance, an iterative technique for adjusting parameters is used.

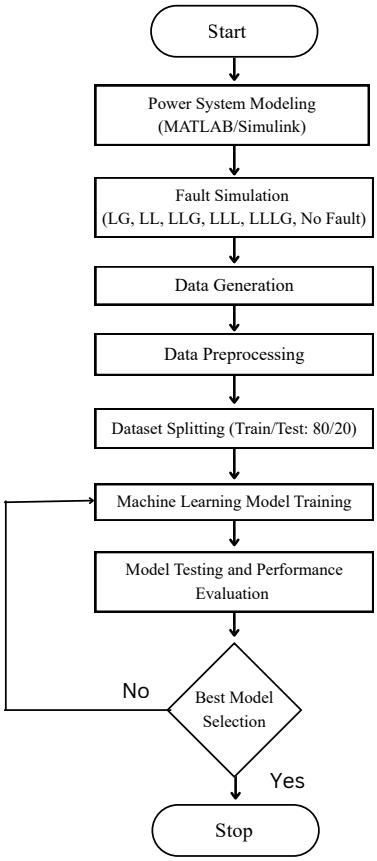

Figure 1. Flowchart of the Proposed Methodology

A. System Model Description

The simulation model used for fault simulation and dataset generation is shown in fig.2. The system is developed using Simscape Electrical toolbox in MATLAB/Simulink.

The modeled network is a 4-bus, 50 Hz power system. The buses 1 and 4 operate as generator buses, while the buses 2 and 3 function as load buses. The buses are interconnected through 11 kV transmission lines of 100 km length between buses 1-2, 2-3, and 3-4. Static loads of 10 MW, 15 MW, and 5 MW are connected at buses 2, 3, and 4, respectively.

Fault simulation blocks are integrated into each of the transmission line to generate line-to-ground (LG), line-to-line (LL), line-to-line-to-ground (LLG), three-phase-to-ground

(LLLG) and three-phase (LLL) faults. The fault resistance is 50 Ω to capture fault severity levels.

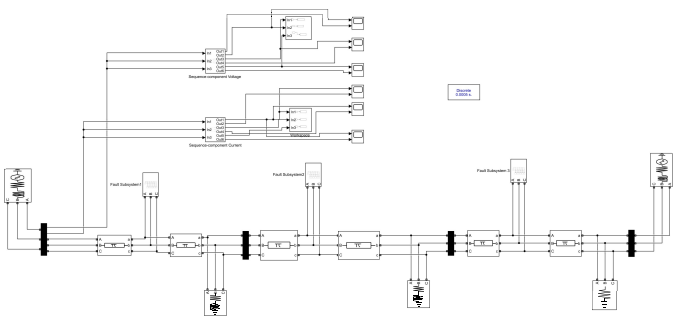

Figure 2. Power System Model

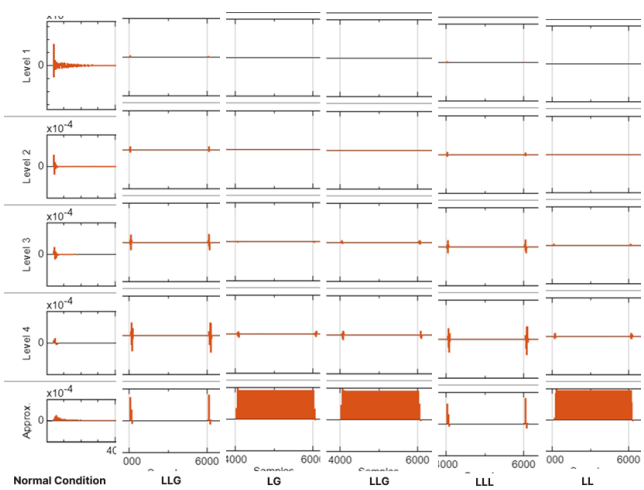

Figure 3. Wavelet Transform Waveform

Discrete Wavelet Transform (DWT) was applied using the Daubechies-4 mother wavelet (db4) under different conditions at different levels. The fig. 3 explain the behavior of the three phase line current under normal operation and various fault conditions from the MATLAB/Simulink-based power system model that presented the steady-state current characteristics. Under Normal condition the three-phase current waveform are balanced, but in abnormal or fault condition the magnitude of the current is changed shown in the above figure.

B. Dataset Collection

The dataset used in this study was produced using a MATLAB/Simulink-based three-phase power system model. Various operating conditions were simulated, including line-to-ground (LG), line-to-line (LL), line-to-line-to-ground (LLG), three-phase (LLL), three-phase-to-ground (LLLG), and no-fault conditions. For each scenario, three-phase voltage and current signals were recorded and transformed into positive, negative, and zero-sequence components. Furthermore, a Discrete Wavelet Transform (DWT) was applied to the measured signals using the mother wavelet Daubechies-4 (db4). The detailed coefficients (D1, D2, D3 and D4) were used for feature extraction from the measured parameter, and these features are then fed to a trained machine learning and ANN model to detect fault condition. The extracted sequence and wavelet features were labeled according to the corresponding fault type to form a supervised learning dataset.

C. Data Preprocessing

The extracted sequence components and wavelet coefficients were processed to construct feature vectors for classification. Statistical measures, including wavelet energy and mean values, were computed from the discrete wavelet coefficients to effectively represent the fault characteristics.

D. Model Training and Optimization

The normalized feature vectors were used to train machine learning models for fault classification. Model parameters were optimized through iterative training to improve the convergence and classification accuracy. The trained models were validated using the testing dataset and performance was evaluated based on classification accuracy and related metrics. The model achieving the best overall performance was selected for the final fault identification.

Random Forest (RF) employs bootstrap aggregation (bagging) and random feature selection to reduce variance and improve generalization.

Let the training dataset be defined as:

$$D = \{(x_i, y_i)\}_{i=1}^{N} \tag{1}$$

where

- $x_i \in \mathbb{R}^d$ is the d-dimensional feature vector of the i-th sample,
- $y_i \in \{1, 2, \ldots, C\}$ is the corresponding class label.

E. Artificial Neural Networks Architecture

ANN (Artificial Neural Network) was implemented using the Tensor Flow-Keras Framework with one input layer, five connected hidden layers and one output layer as shown in fig. 4, where each layer is followed by batch normalization, ReLU activation, and dropout regularization with a dropout rate of 0.25, while the output layer was employed with Softmax activation function to enable multi-class classification. Along with sequential (positive, negative, and zero) voltage and current components, the detailed wavelet coefficients of the negative sequence components of voltage and current is given as input to the ANN model. The input layer was followed by five hidden layers with decreasing neurons i.e, 128, 64, 32, 16, and 8 with ReLU activation function, which is widely used nonlinear activation function in deep neural networks to learn

complex and nonlinear correlation between input and output classes. Mathematically, it is defined as :

$$f(z) = \max(0, x) \tag{2}$$

where, 'x' denotes the weighted sum of inputs to a neuron, including the bias term [12].

With the number of neurons equal to the number of fault classes, the output layer was employed with Softmax function. Mathematically, softmax function was define as:

$$\sigma(z)_i = \frac{e^{z_i}}{\sum_{j=1}^{k} e^{z_j}} \tag{3}$$

where

e^{z_i} denotes the exponential of the i-th input and $\sum_{j=1}^{k} e^{z_j}$ represents the sum of the exponentials of all inputs [13].

The ANN was trained with Adam optimization algorithm, which adaptably accommodates the learning rate, which was initially set as 0.001 to improve convergence speed and stability. The ANN model was trained with 300 epoch and a batch size of 64. In order to improve the generalization performance and to prevent overfitting, early stopping was implemented based on the validation losses with a patience of 20 epochs. Finally, the performance of the models was estimated based on accuracy, precision, recall, and F1-score as listed in the classification report. In addition to that, a confusion matrix was used to perform an analysis of each class.

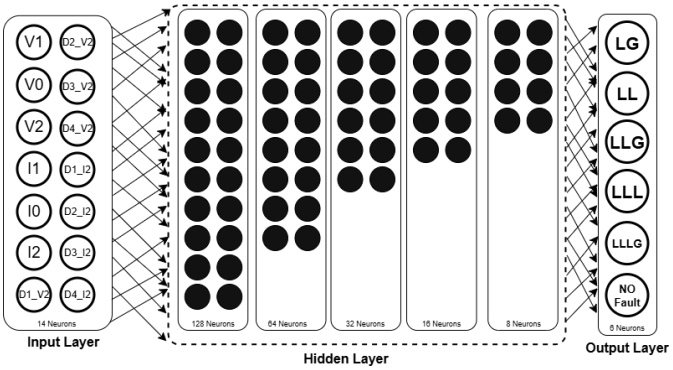

Figure 4. Artificial Neural Network Architecture

F. Hyperparameter Tuning

Hyperparameter tuning in Random Forest classifier was done to obtain optimal model performance, systematic tuning was done on major hyperparameter that impact on model complexity and generalization ability. The tuning focused on key parameters, especially the number of trees (n_estimators), tree depth (max_depth), minimum samples required for node splitting (min_samples split), minimum samples at leaf nodes (min_samples leaf), and the feature selection strategy (max_features) were experimented with the ranges to obtain the best model. Above table I, summarizes the search for best parameter with cross validation of five-fold of training datasets which was separated on 80:20 ratio of whole dataset. The best hyperparameter were a combination of 100 decision trees with unlimited tree depth. A minimum of two samples were required to split internal nodes, while leaf nodes were constrained to contain at least one sample. The choice of 'sqrt' feature selection method was commonly selected in Random Forest.

All other parameters, including the splitting criterion, the bootstrap, and the regularization parameters, were left set to their default values. These set of hyperparameter provides optimal accuracy and efficiency of model to predict the fault classification accurately.

TABLE I
HYPERPARAMETER TUNING VS. BEST MODEL PARAMETERS

Hyperparameter	Tuning Range	Best Value
n_estimators	100, 200, 300	100
criterion	Not tuned	gini
max_depth	None, 10, 20, 30	None
min_samples_split	2, 5, 10	2
min_samples_leaf	1, 2, 4	1
min_weight_fraction_leaf	Not tuned	0.0
max_features	sqrt, log2	sqrt

IV. RESULT AND DISCUSSION

In the MATLAB/Simulink-Based power system model, various fault scenarios were created, and data was extracted then evaluated using several machine learning models. The 4 models: Random Forest (RF), XGBoost, Decision Trees (DT), and Artificial Neural Network (ANN) are compared in the basis of their accuracy, precision, recall, and F1-Score across the multi-class fault dataset.

Below, Table II summarizes the weighted performance results between the models. Among them, the best model on our dataset is Random Forest achieving 97.58 percentage of accuracy along with superior precision, recall, and F1-score values where as XGBoost with 97.36 slightly lower, Decision Trees with accuracy 96.58, and ANN with lowest accuracy among 4 models with 88.12. So, above result shows that the machine learning model is better for classification of fault than the artificial neural network.

TABLE II
COMPARISON OF MACHINE LEARNING MODELS USING WEIGHTED PERFORMANCE METRICS

Model	Accuracy	Precision (Weighted)	Recall (Weighted)	F1-score (Weighted)
Random Forest	0.975837	0.975829	0.975837	0.975832
XGBoost	0.973615	0.973652	0.973615	0.973612
Decision Tree	0.965838	0.965820	0.965838	0.965823
ANN	0.881266	0.884930	0.881266	0.878947

The fig. 5 and Table III, are the confusion matrix and classification report simultaneously, which shows that the model was accurate to classify the LG, LLG, LL, no fault, whereas few test data shows that only few data miss-predict between the LLLG and LLL fault as the nature, electrical characteristics and waveform patterns of these faults are similar to each, as 81 samples of LLL were predicted as LLLG and 77 samples of LLLG were predicted as LLL. The performance of all 4 models is nearly ideal among other faults, except for LLLG and LLL. Despite this, the misclassifications rate remains

TABLE III
CLASSIFICATION REPORT FOR RANDOM FOREST MODEL.

Class	Precision	Recall	F1-score	Support
LG	0.996727	1.000000	0.998361	1218
LL	0.997494	0.996661	0.997077	1198
LLG	0.996683	0.996683	0.996683	1206
LLL	0.935563	0.936327	0.935945	1225
LLLG	0.935619	0.934057	0.934837	1198
No Fault	1.000000	0.998270	0.999134	1156
Accuracy			0.976809	7201
Macro Avg	0.977014	0.977000	0.977006	7201
Weighted Avg	0.976801	0.976809	0.976804	7201

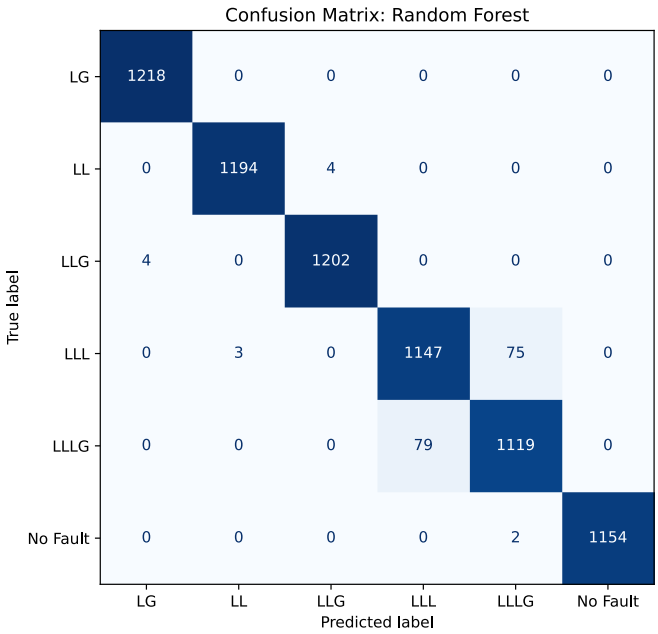

Figure 5. Confusion Matrix of the Proposed Classification Model

negligible, and it doesn't affect the overall performance of the model.

Finally, the result shows that the machine learning model is best when comparing between tree based model and artificial neural network.

V. CONCLUSION

In this paper, a methodology with a capability to classify various kinds of faults in a transmission line using a combination of wavelet attributes and symmetrical sequence components has been given. The hybrid attribute identification system is very efficient in identifying both transient and imbalance aspects of fault signals.

A detailed comparative study among a variety of machine learning algorithms and an artificial neural network is performed to compare their performance under equal circumstances. The outcome shows that among the learning algorithms, especially the random forest classifier, have better classification accuracy with a lower misclassifications rate compared to individual learning algorithms and ANN solutions. The better performance confirms the effectiveness of ensemble learning algorithms using meaningful and time-frequency domain features.

Overall, the proposed method holds great potential in being used in intelligent transmission line protection systems and can therefore help in identifying faults in a quick and efficient manner in a power system.

Our future work will be focusing on the Real-World data and precise location of the fault in transmission lines.

ACKNOWLEDGMENT

The authors would like to express their sincere gratitude to Nepal Engineering College for organizing the conference and for providing an excellent academic platform to present and submit this research work. We are thankful to the institution for fostering a research-oriented environment and encouraging undergraduate students to engage in innovative and effective research.

REFERENCES

[1] A. Abdullah, "Ultrafast transmission line fault detection using a dwt-based ann," *IEEE Transactions on Industry Applications*, vol. 54, no. 2, pp. 1182–1193, 2017.

[2] A. S. Alhanaf, H. H. Balik, and M. Farsadi, "Intelligent fault detection and classification schemes for smart grids based on deep neural networks," *Energies*, vol. 16, no. 22, p. 7680, 2023.

[3] M. O. F. Goni, M. Nahiduzzaman, M. S. Anower, M. M. Rahman, M. R. Islam, M. Ahsan, J. Haider, and M. Shahjalal, "Fast and accurate fault detection and classification in transmission lines using extreme learning machine," *e-Prime-Advances in Electrical Engineering, Electronics and Energy*, vol. 3, p. 100107, 2023.

[4] E. B. M. Tayeb, "Faults detection in power systems using artificial neural network," *American Journal of Engineering Research*, vol. 2, no. 6, pp. 69–75, 2013.

[5] N. N. Bon *et al.*, "Fault identification, classification, and location on transmission lines using combined machine learning methods." *International Journal of Engineering & Technology Innovation*, vol. 12, no. 2, 2022.

[6] Y. Özüpak, "Machine learning-based fault detection in transmission lines: A comparative study with random search optimization," *Bulletin of the Polish Academy of Sciences. Technical Sciences*, vol. 73, no. 2, 2025.

[7] O. O. Awodiji and I. T. John, "Artificial neural network based fault detection, classification and location in transmission lines," *IRE Journal*, vol. 7, no. 11, pp. 420–428, May 2024.

[8] S. Safty, H. A. Ashour, H. Dessouki, and M. Sawaf, "Online fault detection of transmission line using artificial neural network," in *2004 International Conference on Power System Technology, 2004. PowerCon 2004.*, vol. 2. IEEE, 2004, pp. 1629–1632.

[9] S. I. Ahmed, M. F. Rahman, S. Kundu, R. M. Chowdhury, A. O. Hussain, and M. Ferdoushi, "Deep neural network based fault classification and location detection in power transmission line," in *2022 12th International Conference on Electrical and Computer Engineering (ICECE)*. IEEE, 2022, pp. 252–255.

[10] N. A. M. Leh, F. M. Zain, Z. Muhammad, S. Abd Hamid, and A. D. Rosli, "Fault detection method using ann for power transmission line," in *2020 10th IEEE international conference on control system, computing and engineering (ICCSCE)*. IEEE, 2020, pp. 79–84.

[11] H. W. Olalekan, O. I. Augustine, and G. Mathurine, "Artificial neural network-based fault detection on nigerian 330kv power transmission line," *Int. J. Res. Rev*, vol. 11, pp. 518–535, 2024.

[12] Y. Bai, "Relu-function and derived function review," *SHS Web of Conferences*, vol. 144, p. 02006, 08 2022.

[13] J. Ren and H. Wang, "Chapter 3 - calculus and optimization," in *Mathematical Methods in Data Science*, J. Ren and H. Wang, Eds. Elsevier, 2023, pp. 51–89. [Online]. Available: https://www.sciencedirect.com/science/article/pii/B9780443186790000090